Vintage Brass Shower Head and Wall Arm

Gunmetal

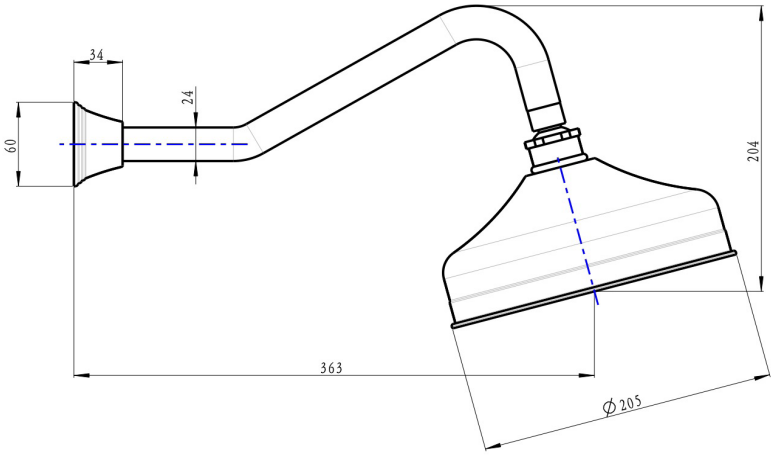

Product Specifications

Code	VIN-39-GM
Barcode	9339897017473
Material	Brass
Finish	Gunmetal

WELS Rating	3 Star
WELS Reg No	S17734
WELS L/Min	9L/Min

Experience, *the difference.*

LINSOL.COM.AU

1300 546 765

info@linsol.com.au

PO Box 88, Coniston NSW 2500

Warranty is for domestic use only. All information is correct as at time of writing.
The actual product may vary slightly and sizes may be scaled up or down